Edexcel (U.K.) Pre 2017

Questions By Topic

M2 Chap01 Kinematics

Compiled By: Dr Yu

Editors: Betül, Signal, Vivian

www.CasperYC.club

Last updated: February 10, 2026

CC BY NC ND

DrYuFromShanghai@QQ.com

Leave blank

1. A tennis ball of mass 0.1 kg is hit by a racquet. Immediately before being hit, the ball has velocity $30\mathbf{i}$ m s^{-1}. The racquet exerts an impulse of $(-2\mathbf{i} - 4\mathbf{j})$ N s on the ball. By modelling the ball as a particle, find the velocity of the ball immediately after being hit.

(4)

Leave blank

1. A particle of mass 0.25 kg is moving with velocity $(3\mathbf{i} + 7\mathbf{j})$ m s^{-1} when it receives the impulse $(5\mathbf{i} - 3\mathbf{j})$ N s.

Find the speed of the particle immediately after the impulse.

(5)

Leave blank

1. A particle P of mass 2 kg is moving with velocity $(\mathbf{i} - 4\mathbf{j})$ m s^{-1} when it receives an impulse of $(3\mathbf{i} + 6\mathbf{j})$ N s.

Find the speed of P immediately after the impulse is applied.

(5)

Leave blank

1. A particle P moves on the x-axis. The acceleration of P at time t seconds, $t \geqslant 0$, is $(3t + 5)$ m s^{-2} in the positive x-direction. When $t = 0$, the velocity of P is 2 m s^{-1} in the positive x-direction. When $t = T$, the velocity of P is 6 m s^{-1} in the positive x-direction. Find the value of T.

(6)

Leave blank

1. A particle P moves on the x-axis. At time t seconds, its acceleration is $(5 - 2t)\,\text{m s}^{-2}$, measured in the direction of x increasing. When $t = 0$, its velocity is $6\,\text{m s}^{-1}$ measured in the direction of x increasing. Find the time when P is instantaneously at rest in the subsequent motion.

(6)

Q1

(Total 6 marks)

Leave blank

2. A particle P of mass 0.5 kg moves under the action of a single force **F** newtons. At time t seconds, the velocity **v** m s^{-1} of P is given by

$$\mathbf{v} = 3t^2\mathbf{i} + (1 - 4t)\mathbf{j}.$$

Find

(a) the acceleration of P at time t seconds,

(2)

(b) the magnitude of **F** when $t = 2$.

(4)

Leave blank

5.

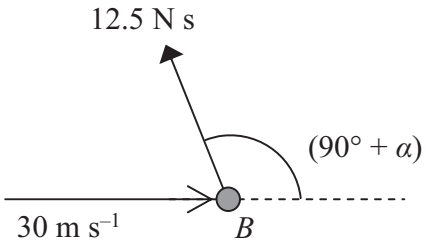

Figure 3

A small ball B of mass 0.25 kg is moving in a straight line with speed 30 m s^{-1} on a smooth horizontal plane when it is given an impulse. The impulse has magnitude 12.5 N s and is applied in a horizontal direction making an angle of $(90° + \alpha)$, where $\tan\alpha = \frac{3}{4}$, with the initial direction of motion of the ball, as shown in Figure 3.

(i) Find the speed of B immediately after the impulse is applied.

(ii) Find the direction of motion of B immediately after the impulse is applied.

(6)

Leave blank

4.

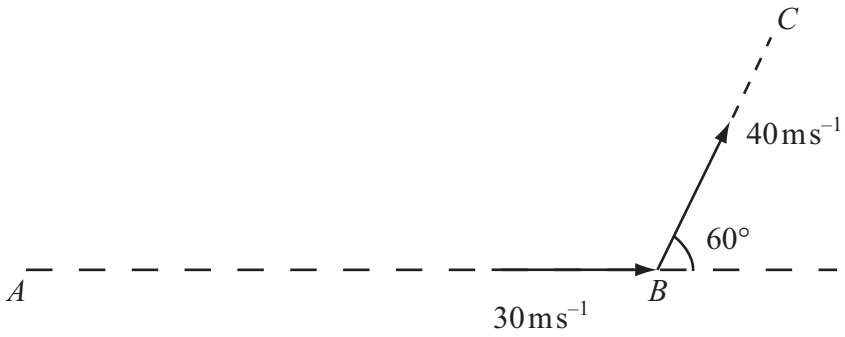

Figure 1

The points A, B and C lie in a horizontal plane. A batsman strikes a ball of mass 0.25 kg. Immediately before being struck, the ball is moving along the horizontal line AB with speed $30\,\text{m s}^{-1}$. Immediately after being struck, the ball moves along the horizontal line BC with speed $40\,\text{m s}^{-1}$. The line BC makes an angle of 60° with the original direction of motion AB, as shown in Figure 1.

Find, to 3 significant figures,

(i) the magnitude of the impulse given to the ball,

(ii) the size of the angle that the direction of this impulse makes with the original direction of motion AB.

(8)

Leave blank

3. A cricket ball of mass 0.5 kg is struck by a bat. Immediately before being struck, the velocity of the ball is $(-30\mathbf{i})$ m s^{-1}. Immediately after being struck, the velocity of the ball is $(16\mathbf{i} + 20\mathbf{j})$ m s^{-1}.

(a) Find the magnitude of the impulse exerted on the ball by the bat.

(4)

In the subsequent motion, the position vector of the ball is $\mathbf{r}$ metres at time t seconds. In a model of the situation, it is assumed that $\mathbf{r} = [16t\mathbf{i} + (20t - 5t^2)\mathbf{j}]$. Using this model,

(b) find the speed of the ball when $t = 3$.

(4)

Leave blank

1. A particle P moves along the x-axis. At time t seconds the velocity of P is $v\,\text{m s}^{-1}$ in the positive x-direction, where $v = 3t^2 - 4t + 3$. When $t = 0$, P is at the origin O. Find the distance of P from O when P is moving with minimum velocity.

(8)

Leave blank

4. A particle P moves along the x-axis in a straight line so that, at time t seconds, the velocity of P is v m s^{-1}, where

$$v = \begin{cases} 10t - 2t^2, & 0 \leqslant t \leqslant 6, \\ \dfrac{-432}{t^2}, & t > 6. \end{cases}$$

At $t = 0$, P is at the origin O. Find the displacement of P from O when

(a) $t = 6$,

(3)

(b) $t = 10$.

(5)

Leave blank

5. A vertical cliff is 73.5 m high. Two stones A and B are projected simultaneously. Stone A is projected horizontally from the top of the cliff with speed $28\,\text{m s}^{-1}$. Stone B is projected from the bottom of the cliff with speed $35\,\text{m s}^{-1}$ at an angle α above the horizontal. The stones move freely under gravity in the same vertical plane and collide in mid-air. By considering the horizontal motion of each stone,

(a) prove that $\cos\alpha = \frac{4}{5}$.

(4)

(b) Find the time which elapses between the instant when the stones are projected and the instant when they collide.

(4)

Leave blank

3. A ball of mass 0.5 kg is moving with velocity $12\mathbf{i}$ m s^{-1} when it is struck by a bat. The impulse received by the ball is $(-4\mathbf{i}+7\mathbf{j})$ N s. By modelling the ball as a particle, find

(a) the speed of the ball immediately after the impact,

(4)

(b) the angle, in degrees, between the velocity of the ball immediately after the impact and the vector $\mathbf{i}$,

(2)

(c) the kinetic energy gained by the ball as a result of the impact.

(2)

Leave blank

3. A particle moves along the x-axis. At time $t = 0$ the particle passes through the origin with speed 8 m s^{-1} in the positive x-direction. The acceleration of the particle at time t seconds, $t \geqslant 0$, is $(4t^3 - 12t)$ m s^{-2} in the positive x-direction.

Find

(a) the velocity of the particle at time t seconds,

(3)

(b) the displacement of the particle from the origin at time t seconds,

(2)

(c) the values of t at which the particle is instantaneously at rest.

(3)

Leave blank

5. [*In this question* **i** *and* **j** *are perpendicular unit vectors in a horizontal plane.*]

A ball of mass 0.5 kg is moving with velocity $(10\mathbf{i} + 24\mathbf{j})$ m s^{-1} when it is struck by a bat. Immediately after the impact the ball is moving with velocity $20\mathbf{i}$ m s^{-1}.

Find

(a) the magnitude of the impulse of the bat on the ball,

(4)

(b) the size of the angle between the vector **i** and the impulse exerted by the bat on the ball,

(2)

(c) the kinetic energy lost by the ball in the impact.

(3)

Leave blank

3. A particle P moves in a horizontal plane. At time t seconds, the position vector of P is $\mathbf{r}$ metres relative to a fixed origin O, and $\mathbf{r}$ is given by

$$\mathbf{r} = (18t - 4t^3)\mathbf{i} + ct^2\mathbf{j},$$

where c is a positive constant. When $t = 1.5$, the speed of P is 15 m s^{-1}. Find

(a) the value of c,

(6)

(b) the acceleration of P when $t = 1.5$.

(3)

Leave blank

2. At time $t = 0$ a particle P leaves the origin O and moves along the x-axis. At time t seconds the velocity of P is v m s^{-1}, where

$$v = 8t - t^2 .$$

(a) Find the maximum value of v.

(4)

(b) Find the time taken for P to return to O.

(5)

Leave blank

3. A particle P moves along a straight line in such a way that at time t seconds its velocity v m s^{-1} is given by

$$v = \frac{1}{2}t^2 - 3t + 4$$

Find

(a) the times when P is at rest,

(4)

(b) the total distance travelled by P between $t = 0$ and $t = 4$.

(5)

Leave blank

2. At time t seconds ($t \geqslant 0$), a particle P has position vector $\mathbf{p}$ metres, with respect to a fixed origin O, where

$$\mathbf{p} = (3t^2 - 6t + 4)\mathbf{i} + (3t^3 - 4t)\mathbf{j}.$$

Find

(a) the velocity of P at time t seconds,

(2)

(b) the value of t when P is moving parallel to the vector $\mathbf{i}$.

(3)

When $t = 1$, the particle P receives an impulse of $(2\mathbf{i} - 6\mathbf{j})$ N s. Given that the mass of P is 0.5 kg,

(c) find the velocity of P immediately after the impulse.

(4)

Leave blank

2. A particle P is moving in a plane. At time t seconds, P is moving with velocity $\mathbf{v}$ m s^{-1}, where $\mathbf{v} = 2t\mathbf{i} - 3t^2\mathbf{j}$.

Find

(a) the speed of P when $t = 4$

(2)

(b) the acceleration of P when $t = 4$

(3)

Given that P is at the point with position vector $(-4\mathbf{i} + \mathbf{j})$ m when $t = 1$,

(c) find the position vector of P when $t = 4$

(5)

Leave blank

1. [*In this question* **i** *and* **j** *are perpendicular unit vectors in a horizontal plane.*]

A particle P moves in such a way that its velocity $\mathbf{v}$ m s^{-1} at time t seconds is given by

$$\mathbf{v} = (3t^2 - 1)\mathbf{i} + (4t - t^2)\mathbf{j}$$

(a) Find the magnitude of the acceleration of P when $t = 1$

(5)

Given that, when $t = 0$, the position vector of P is $\mathbf{i}$ metres,

(b) find the position vector of P when $t = 3$

(5)

Leave blank

4. A darts player throws darts at a dart board which hangs vertically. The motion of a dart is modelled as that of a particle moving freely under gravity. The darts move in a vertical plane which is perpendicular to the plane of the dart board. A dart is thrown horizontally with speed $12.6\ \text{m s}^{-1}$. It hits the board at a point which is 10 cm below the level from which it was thrown.

(a) Find the horizontal distance from the point where the dart was thrown to the dart board.

(4)

The darts player moves his position. He now throws a dart from a point which is at a horizontal distance of 2.5 m from the board. He throws the dart at an angle of elevation α to the horizontal, where $\tan\alpha = \frac{7}{24}$. This dart hits the board at a point which is at the same level as the point from which it was thrown.

(b) Find the speed with which the dart is thrown.

(6)

Leave blank

4. At time t seconds the velocity of a particle P is $\left[(4t-5)\mathbf{i}+3\mathbf{j}\right]$ m s^{-1}. When $t=0$, the position vector of P is $(2\mathbf{i}+5\mathbf{j})$ m, relative to a fixed origin O.

(a) Find the value of t when the velocity of P is parallel to the vector $\mathbf{j}$.

(1)

(b) Find an expression for the position vector of P at time t seconds.

(4)

A second particle Q moves with constant velocity $(-2\mathbf{i}+c\mathbf{j})$ m s^{-1}. When $t=0$, the position vector of Q is $(11\mathbf{i}+2\mathbf{j})$ m. The particles P and Q collide at the point with position vector $(d\mathbf{i}+14\mathbf{j})$ m.

(c) Find

(i) the value of c,

(ii) the value of d.

(5)

Leave blank

6. A particle P moves on the x-axis. The acceleration of P at time t seconds is $(t-4)$ m s^{-2} in the positive x-direction. The velocity of P at time t seconds is v m s^{-1}. When $t = 0$, $v = 6$.

Find

(a) v in terms of t,

(4)

(b) the values of t when P is instantaneously at rest,

(3)

(c) the distance between the two points at which P is instantaneously at rest.

(4)

Leave blank

6.

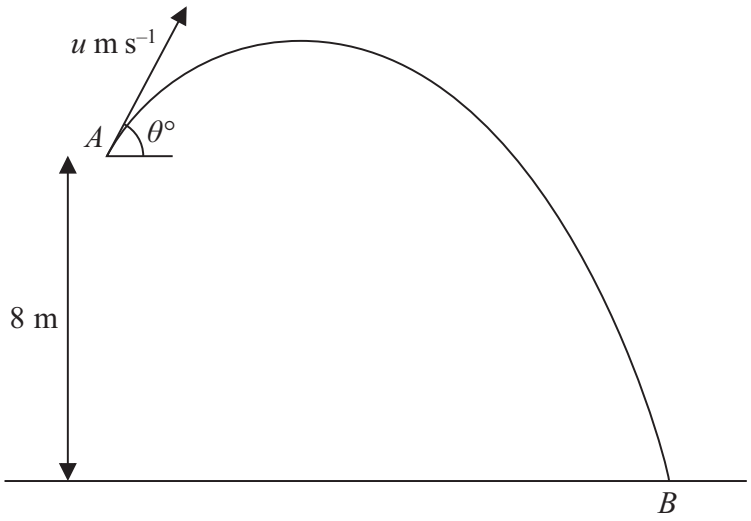

Figure 4

A ball is projected from a point A which is 8 m above horizontal ground as shown in Figure 4. The ball is projected with speed u m s^{-1} at an angle $\theta°$ above the horizontal. The ball moves freely under gravity and hits the ground at the point B. The speed of the ball immediately before it hits the ground is $2u$ m s^{-1}.

(a) By considering energy, find the value of u.

(5)

The time taken for the ball to move from A to B is 2 seconds. Find

(b) the value of θ,

(4)

(c) the minimum speed of the ball on its path from A to B.

(2)

Leave blank

7.

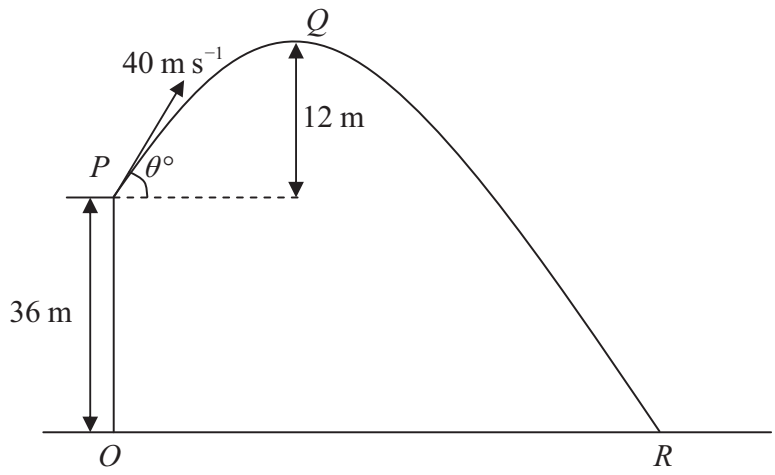

Figure 3

A ball is projected with speed 40 m s^{-1} from a point P on a cliff above horizontal ground. The point O on the ground is vertically below P and OP is 36 m. The ball is projected at an angle $\theta°$ to the horizontal. The point Q is the highest point of the path of the ball and is 12 m above the level of P. The ball moves freely under gravity and hits the ground at the point R, as shown in Figure 3. Find

(a) the value of θ,

(3)

(b) the distance OR,

(6)

(c) the speed of the ball as it hits the ground at R.

(3)

Leave blank

6. [*In this question, the unit vectors* **i** *and* **j** *are in a vertical plane,* **i** *being horizontal and* **j** *being vertically upwards.*]

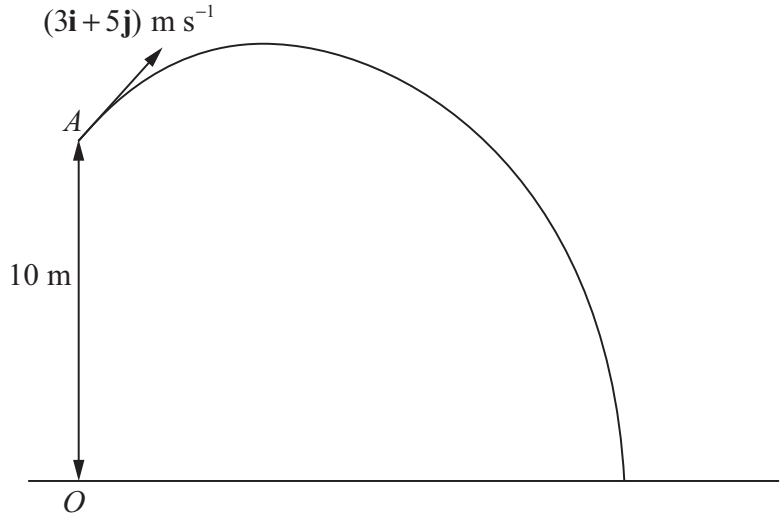

Figure 3

At time $t = 0$, a particle P is projected from the point A which has position vector $10\mathbf{j}$ metres with respect to a fixed origin O at ground level. The ground is horizontal. The velocity of projection of P is $(3\mathbf{i}+5\mathbf{j})$ m s^{-1}, as shown in Figure 3. The particle moves freely under gravity and reaches the ground after T seconds.

(a) For $0 \leqslant t \leqslant T$, show that, with respect to O, the position vector, $\mathbf{r}$ metres, of P at time t seconds is given by

$$\mathbf{r} = 3t\mathbf{i} + (10 + 5t - 4.9t^2)\mathbf{j}$$

(3)

(b) Find the value of T.

(3)

(c) Find the velocity of P at time t seconds $(0 \leqslant t \leqslant T)$.

(2)

When P is at the point B, the direction of motion of P is 45° below the horizontal.

(d) Find the time taken for P to move from A to B.

(2)

(e) Find the speed of P as it passes through B.

(2)

Leave blank

4. A particle P of mass 0.5 kg is moving under the action of a single force $\mathbf{F}$ newtons. At time t seconds,

$$\mathbf{F} = (6t - 5)\,\mathbf{i} + (t^2 - 2t)\,\mathbf{j}.$$

The velocity of P at time t seconds is $\mathbf{v}$ m s^{-1}. When $t = 0$, $\mathbf{v} = \mathbf{i} - 4\mathbf{j}$.

(a) Find $\mathbf{v}$ at time t seconds.

(6)

When $t = 3$, the particle P receives an impulse $(-5\mathbf{i} + 12\mathbf{j})$ N s.

(b) Find the speed of P immediately after it receives the impulse.

(6)

Leave blank

6.

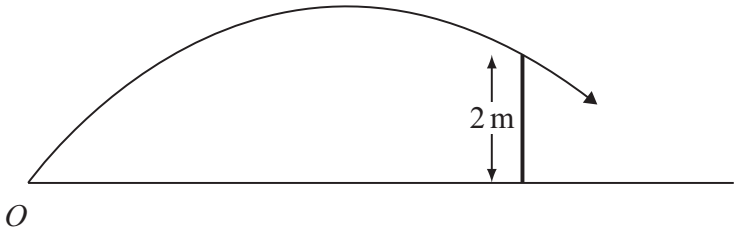

Figure 3

A child playing cricket on horizontal ground hits the ball towards a fence 10 m away. The ball moves in a vertical plane which is perpendicular to the fence. The ball just passes over the top of the fence, which is 2 m above the ground, as shown in Figure 3.

The ball is modelled as a particle projected with initial speed u m s^{-1} from point O on the ground at an angle α to the ground.

(a) By writing down expressions for the horizontal and vertical distances, from O of the ball t seconds after it was hit, show that

$$2 = 10\tan\alpha - \frac{50g}{u^2\cos^2\alpha}.$$

(6)

Given that $\alpha = 45°$,

(b) find the speed of the ball as it passes over the fence.

(6)

Leave blank

6.

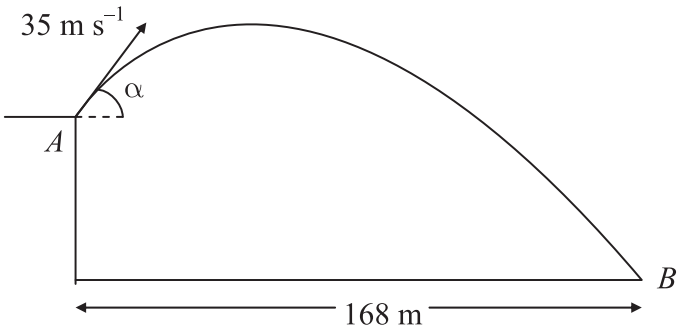

Figure 4

A golf ball P is projected with speed 35 m s^{-1} from a point A on a cliff above horizontal ground. The angle of projection is α to the horizontal, where $\tan \alpha = \frac{4}{3}$. The ball moves freely under gravity and hits the ground at the point B, as shown in Figure 4.

(a) Find the greatest height of P above the level of A.

(3)

The horizontal distance from A to B is 168 m.

(b) Find the height of A above the ground.

(6)

By considering energy, or otherwise,

(c) find the speed of P as it hits the ground at B.

(3)

Leave blank

6. A particle P of mass 0.5 kg is moving under the action of a single force $\mathbf{F}$ newtons. At time t seconds, $\mathbf{F} = (1.5t^2 - 3)\mathbf{i} + 2t\mathbf{j}$. When $t = 2$, the velocity of P is $(-4\mathbf{i} + 5\mathbf{j})$ m s^{-1}.

(a) Find the acceleration of P at time t seconds.

(2)

(b) Show that, when $t = 3$, the velocity of P is $(9\mathbf{i} + 15\mathbf{j})$ m s^{-1}.

(5)

When $t = 3$, the particle P receives an impulse $\mathbf{Q}$ N s. Immediately after the impulse the velocity of P is $(-3\mathbf{i} + 20\mathbf{j})$ m s^{-1}. Find

(c) the magnitude of $\mathbf{Q}$,

(3)

(d) the angle between $\mathbf{Q}$ and $\mathbf{i}$.

(3)

Leave blank

6.

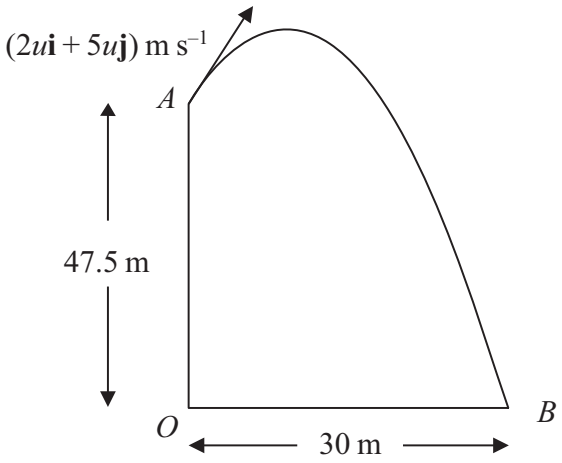

Figure 3

[*In this question, the unit vectors* **i** *and* **j** *are in a vertical plane,* **i** *being horizontal and* **j** *being vertical.*]

A particle P is projected from the point A which has position vector $47.5\mathbf{j}$ metres with respect to a fixed origin O. The velocity of projection of P is $(2u\mathbf{i} + 5u\mathbf{j})$ m s^{-1}. The particle moves freely under gravity passing through the point B with position vector $30\mathbf{i}$ metres, as shown in Figure 3.

(a) Show that the time taken for P to move from A to B is 5 s.

(6)

(b) Find the value of u.

(2)

(c) Find the speed of P at B.

(5)

Leave blank

8. A particle is projected from a point O with speed u at an angle of elevation α above the horizontal and moves freely under gravity. When the particle has moved a horizontal distance x, its height above O is y.

(a) Show that

$$y = x\tan\alpha - \frac{gx^2}{2u^2\cos^2\alpha}$$

(4)

A girl throws a ball from a point A at the top of a cliff. The point A is 8 m above a horizontal beach. The ball is projected with speed $7\ \text{m s}^{-1}$ at an angle of elevation of 45°. By modelling the ball as a particle moving freely under gravity,

(b) find the horizontal distance of the ball from A when the ball is 1 m above the beach.

(5)

A boy is standing on the beach at the point B vertically below A. He starts to run in a straight line with speed $v\ \text{m s}^{-1}$, leaving B 0.4 seconds after the ball is thrown.

He catches the ball when it is 1 m above the beach.

(c) Find the value of v.

(4)

Leave blank

3. A particle P moves on the x-axis. At time t seconds the velocity of P is v m s^{-1} in the direction of x increasing, where

$$v = 2t^2 - 14t + 20, \qquad t \geqslant 0$$

Find

(a) the times when P is instantaneously at rest,

(3)

(b) the greatest speed of P in the interval $0 \leqslant t \leqslant 4$

(5)

(c) the total distance travelled by P in the interval $0 \leqslant t \leqslant 4$

(5)

Leave blank

7.

Figure 3

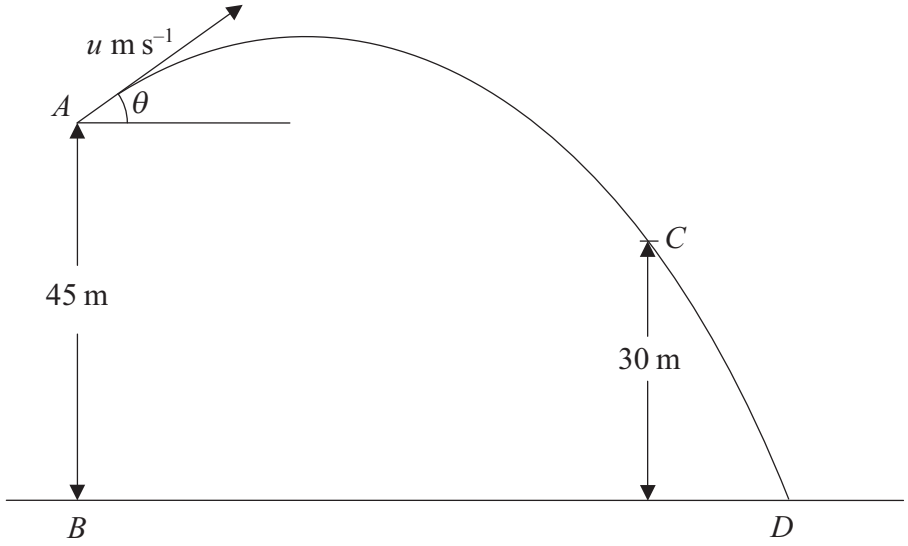

A particle P is projected from a point A with speed u m s^{-1} at an angle of elevation θ, where $\cos\theta = \frac{4}{5}$. The point B, on horizontal ground, is vertically below A and $AB = 45$ m. After projection, P moves freely under gravity passing through a point C, 30 m above the ground, before striking the ground at the point D, as shown in Figure 3.

Given that P passes through C with speed 24.5 m s^{-1},

(a) using conservation of energy, or otherwise, show that $u = 17.5$,

(4)

(b) find the size of the angle which the velocity of P makes with the horizontal as P passes through C,

(3)

(c) find the distance BD.

(7)

Leave blank

7.

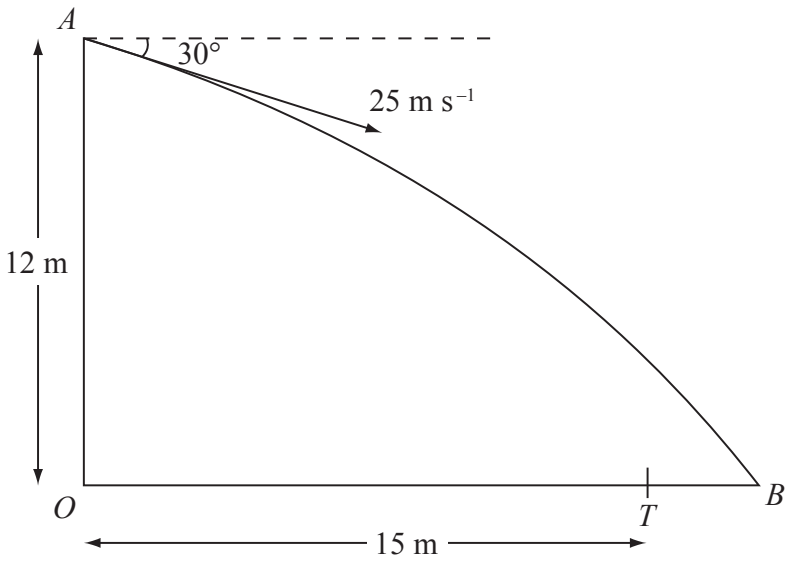

Figure 4

A ball is thrown from a point A at a target, which is on horizontal ground. The point A is 12 m above the point O on the ground. The ball is thrown from A with speed 25 m s^{-1} at an angle of 30° below the horizontal. The ball is modelled as a particle and the target as a point T. The distance OT is 15 m. The ball misses the target and hits the ground at the point B, where OTB is a straight line, as shown in Figure 4. Find

(a) the time taken by the ball to travel from A to B,

(5)

(b) the distance TB.

(4)

The point X is on the path of the ball vertically above T.

(c) Find the speed of the ball at X.

(5)

Leave blank

7. [*In this question, the unit vectors* **i** *and* **j** *are horizontal and vertical respectively.*]

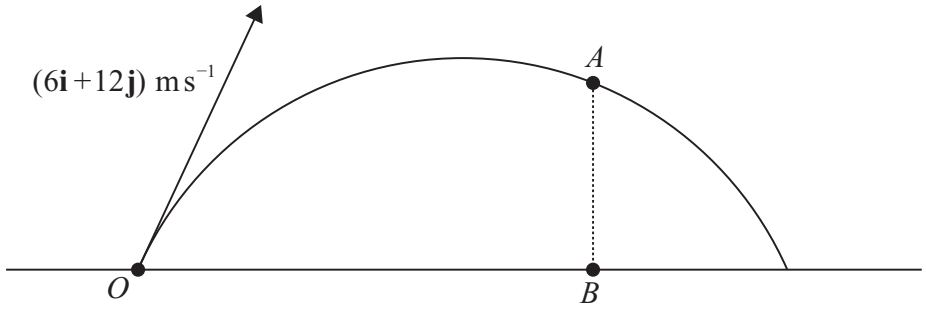

Figure 3

The point O is a fixed point on a horizontal plane. A ball is projected from O with velocity $(6\mathbf{i} + 12\mathbf{j})$ m s^{-1}, and passes through the point A at time t seconds after projection. The point B is on the horizontal plane vertically below A, as shown in Figure 3. It is given that $OB = 2AB$.

Find

(a) the value of t,

(7)

(b) the speed, V m s^{-1}, of the ball at the instant when it passes through A.

(5)

At another point C on the path the speed of the ball is also V m s^{-1}.

(c) Find the time taken for the ball to travel from O to C.

(3)

Leave blank

6.

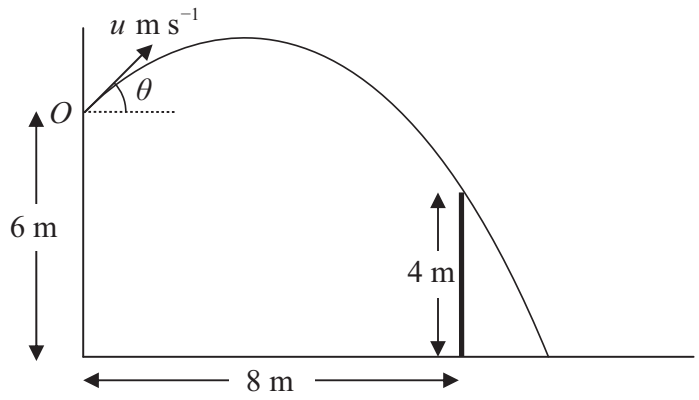

Figure 2

A ball is thrown from a point O, which is 6 m above horizontal ground. The ball is projected with speed u m s^{-1} at an angle θ above the horizontal. There is a thin vertical post which is 4 m high and 8 m horizontally away from the vertical through O, as shown in Figure 2. The ball passes just above the top of the post 2 s after projection. The ball is modelled as a particle.

(a) Show that $\tan\theta = 2.2$

(5)

(b) Find the value of u.

(2)

The ball hits the ground T seconds after projection.

(c) Find the value of T.

(3)

Immediately before the ball hits the ground the direction of motion of the ball makes an angle α with the horizontal.

(d) Find α.

(5)

Leave blank

6.

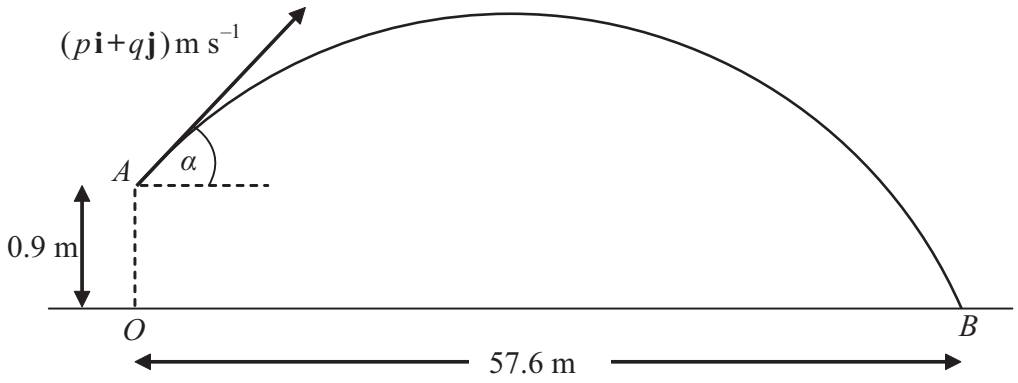

Figure 3

A cricket ball is hit from a point A with velocity of $(p\mathbf{i} + q\mathbf{j})$ m s^{-1}, at an angle α above the horizontal. The unit vectors **i** and **j** are respectively horizontal and vertically upwards. The point A is 0.9 m vertically above the point O, which is on horizontal ground.

The ball takes 3 seconds to travel from A to B, where B is on the ground and $OB = 57.6$ m, as shown in Figure 3. By modelling the motion of the cricket ball as that of a particle moving freely under gravity,

(a) find the value of p,

(2)

(b) show that $q = 14.4$,

(3)

(c) find the initial speed of the cricket ball,

(2)

(d) find the exact value of $\tan \alpha$.

(1)

(e) Find the length of time for which the cricket ball is at least 4 m above the ground.

(6)

(f) State an additional physical factor which may be taken into account in a refinement of the above model to make it more realistic.

(1)

Leave blank

8. A particle P moves on the x-axis. At time t seconds the velocity of P is v m s^{-1} in the direction of x increasing, where v is given by

$$v = \begin{cases} 8t - \frac{3}{2}t^2, & 0 \leqslant t \leqslant 4, \\ 16 - 2t, & t > 4. \end{cases}$$

When $t = 0$, P is at the origin O.

Find

(a) the greatest speed of P in the interval $0 \leqslant t \leqslant 4$,

(4)

(b) the distance of P from O when $t = 4$,

(3)

(c) the time at which P is instantaneously at rest for $t > 4$,

(1)

(d) the total distance travelled by P in the first 10 s of its motion.

(8)

Leave blank

7.

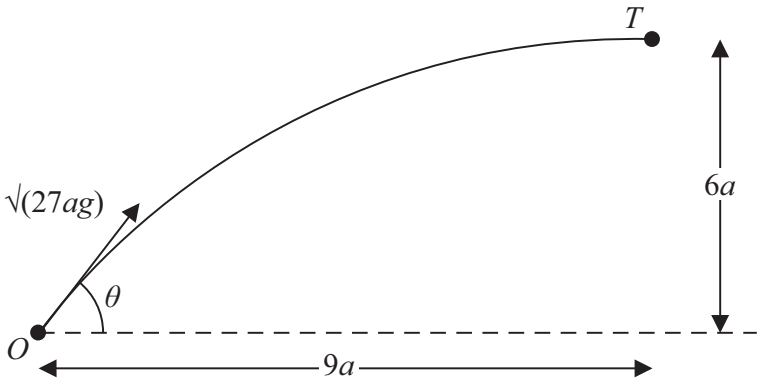

Figure 4

A small ball is projected from a fixed point O so as to hit a target T which is at a horizontal distance $9a$ from O and at a height $6a$ above the level of O. The ball is projected with speed $\sqrt{(27ag)}$ at an angle θ to the horizontal, as shown in Figure 4. The ball is modelled as a particle moving freely under gravity.

(a) Show that $\tan^2\theta - 6\tan\theta + 5 = 0$

(7)

The two possible angles of projection are θ_1 and θ_2, where $\theta_1 > \theta_2$.

(b) Find $\tan\theta_1$ and $\tan\theta_2$.

(3)

The particle is projected at the larger angle θ_1.

(c) Show that the time of flight from O to T is $\sqrt{\left(\frac{78a}{g}\right)}$.

(3)

(d) Find the speed of the particle immediately before it hits T.

(3)

Leave blank

8. [*In this question* **i** *and* **j** *are unit vectors in a horizontal and upward vertical direction respectively*]

A particle P is projected from a fixed point O on horizontal ground with velocity $u(\mathbf{i} + c\mathbf{j})\,\text{m s}^{-1}$, where c and u are positive constants. The particle moves freely under gravity until it strikes the ground at A, where it immediately comes to rest. Relative to O, the position vector of a point on the path of P is $(x\mathbf{i} + y\mathbf{j})\,\text{m}$.

(a) Show that

$$y = cx - \frac{4.9x^2}{u^2}.$$

(5)

Given that $u = 7$, $OA = R\,\text{m}$ and the maximum vertical height of P above the ground is $H\,\text{m}$,

(b) using the result in part (a), or otherwise, find, in terms of c,

(i) R

(ii) H.

(6)

Given also that when P is at the point Q, the velocity of P is at right angles to its initial velocity,

(c) find, in terms of c, the value of x at Q.

(6)

Leave blank

7.

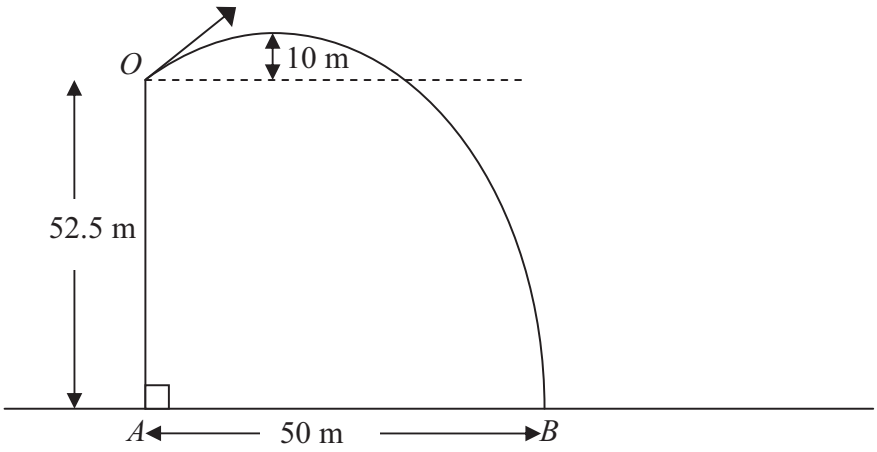

Figure 4

A small stone is projected from a point O at the top of a vertical cliff OA. The point O is 52.5 m above the sea. The stone rises to a maximum height of 10 m above the level of O before hitting the sea at the point B, where $AB = 50$ m, as shown in Figure 4. The stone is modelled as a particle moving freely under gravity.

(a) Show that the vertical component of the velocity of projection of the stone is 14 m s^{-1}.

(3)

(b) Find the speed of projection.

(9)

(c) Find the time after projection when the stone is moving parallel to OB.

(5)