Edexcel (U.K.) Pre 2017

Questions By Topic

C2 Chap09 Differentiation

Compiled By: Dr Yu

Editors: Betül, Signal, Vivian

www.CasperYC.club

Last updated: February 10, 2026

BY NC ND

DrYuFromShanghai@QQ.com

Leave blank

3. $y = x^2 - k\sqrt{x}$, where k is a constant.

(a) Find $\frac{\mathrm{d}y}{\mathrm{d}x}$.

(2)

(b) Given that y is decreasing at $x = 4$, find the set of possible values of k.

(2)

Leave blank

1. Find the coordinates of the stationary point on the curve with equation $y = 2x^2 - 12x$.

(4)

Q1

(Total 4 marks)

Leave blank

1. Using calculus, find the coordinates of the stationary point on the curve with equation

$$y = 2x + 3 + \frac{8}{x^2}, \quad x > 0$$

(6)

Leave blank

1. $$f(x) = x^3 + 3x^2 + 5.$$

Find

(a) $f''(x)$,

(3)

(b) $\int_1^2 f(x)\,dx$.

(4)

9. The curve with equation

$$y = x^2 - 32\sqrt{(x)} + 20, \qquad x > 0$$

has a stationary point P.

Use calculus

(a) to find the coordinates of P,

(6)

(b) to determine the nature of the stationary point P.

(3)

Leave blank

8. A diesel lorry is driven from Birmingham to Bury at a steady speed of v kilometres per hour. The total cost of the journey, £C, is given by

$$C = \frac{1400}{v} + \frac{2v}{7}.$$

(a) Find the value of v for which C is a minimum.

(5)

(b) Find $\frac{\mathrm{d}^2C}{\mathrm{d}v^2}$ and hence verify that C is a minimum for this value of v.

(2)

(c) Calculate the minimum total cost of the journey.

(2)

Leave blank

8. The curve C has equation $y = 6 - 3x - \frac{4}{x^3}$, $x \neq 0$

(a) Use calculus to show that the curve has a turning point P when $x = \sqrt{2}$

(4)

(b) Find the x-coordinate of the other turning point Q on the curve.

(1)

(c) Find $\frac{d^2y}{dx^2}$.

(1)

(d) Hence or otherwise, state with justification, the nature of each of these turning points P and Q.

(3)

9. The curve C has equation $y = 12\sqrt{(x)} - x^{\frac{3}{2}} - 10, \quad x > 0$

(a) Use calculus to find the coordinates of the turning point on C.

(7)

(b) Find $\dfrac{\mathrm{d}^2 y}{\mathrm{d}x^2}$.

(2)

(c) State the nature of the turning point.

(1)

Leave blank

10. The volume V cm^3 of a box, of height x cm, is given by

$$V = 4x(5-x)^2, \qquad 0 < x < 5$$

(a) Find $\dfrac{\mathrm{d}V}{\mathrm{d}x}$.

(4)

(b) Hence find the maximum volume of the box.

(4)

(c) Use calculus to justify that the volume that you found in part (b) is a maximum.

(2)

Leave blank

7. The curve C has equation

$$y = 2x^3 - 5x^2 - 4x + 2.$$

(a) Find $\frac{dy}{dx}$.

(2)

(b) Using the result from part (a), find the coordinates of the turning points of C.

(4)

(c) Find $\frac{d^2y}{dx^2}$.

(2)

(d) Hence, or otherwise, determine the nature of the turning points of C.

(2)

8.

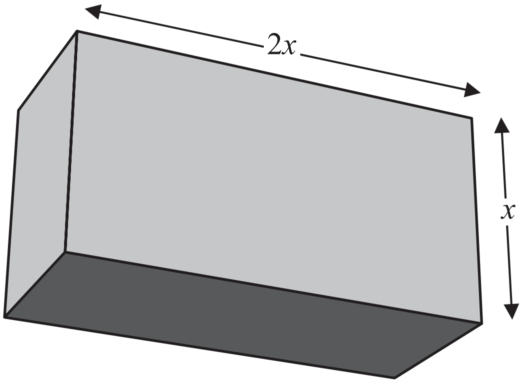

Figure 2

A cuboid has a rectangular cross-section where the length of the rectangle is equal to twice its width, x cm, as shown in Figure 2.
The volume of the cuboid is 81 cubic centimetres.

(a) Show that the total length, L cm, of the twelve edges of the cuboid is given by

$$L = 12x + \frac{162}{x^2}$$

(3)

(b) Use calculus to find the minimum value of L.

(6)

(c) Justify, by further differentiation, that the value of L that you have found is a minimum.

(2)

10.

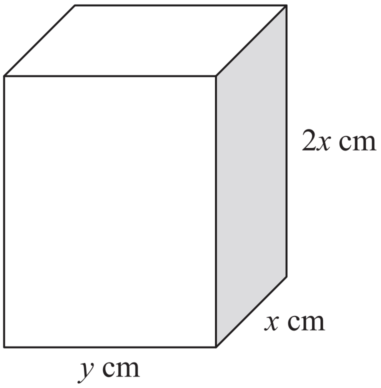

Figure 4

Figure 4 shows a solid brick in the shape of a cuboid measuring 2x cm by x cm by y cm.

The total surface area of the brick is 600 cm^2.

(a) Show that the volume, V cm^3, of the brick is given by

$$V = 200x - \frac{4x^3}{3}.$$

(4)

Given that x can vary,

(b) use calculus to find the maximum value of V, giving your answer to the nearest cm^3.
(5)

(c) Justify that the value of V you have found is a maximum.
(2)

Leave blank

9. **Figure 4**

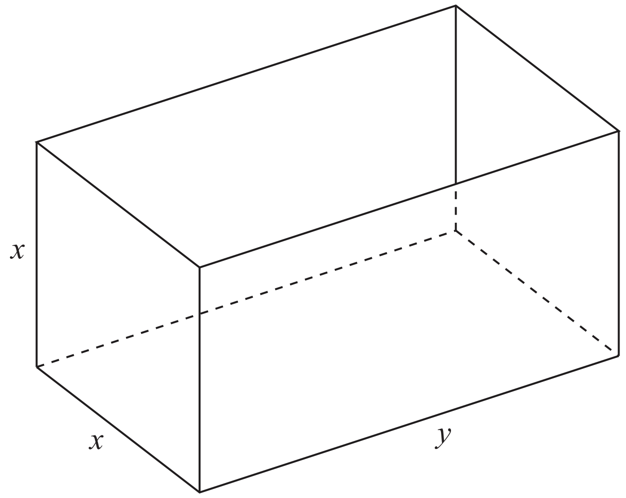

Figure 4 shows an open-topped water tank, in the shape of a cuboid, which is made of sheet metal. The base of the tank is a rectangle x metres by y metres. The height of the tank is x metres.

The capacity of the tank is 100 m^3.

(a) Show that the area A m^2 of the sheet metal used to make the tank is given by

$$A = \frac{300}{x} + 2x^2 .$$

(4)

(b) Use calculus to find the value of x for which A is stationary.

(4)

(c) Prove that this value of x gives a minimum value of A.

(2)

(d) Calculate the minimum area of sheet metal needed to make the tank.

(2)

Leave blank

10. **Figure 1**

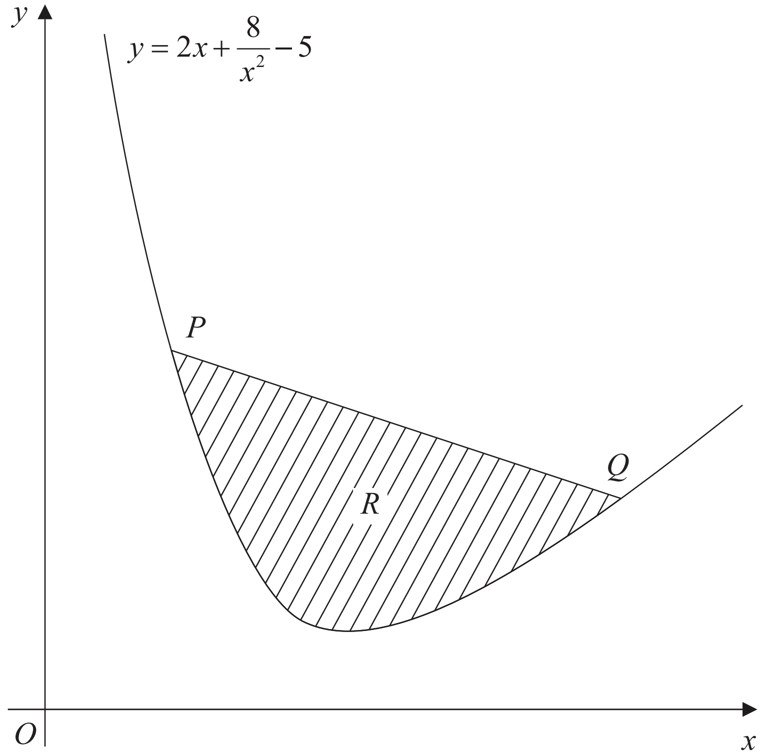

Figure 1 shows part of the curve C with equation $y = 2x + \frac{8}{x^2} - 5,\ x > 0$.

The points P and Q lie on C and have x-coordinates 1 and 4 respectively. The region R, shaded in Figure 1, is bounded by C and the straight line joining P and Q.

(a) Find the exact area of R.

(8)

(b) Use calculus to show that y is increasing for $x > 2$.

(4)

Leave blank

8. (a) Find the value of y such that

$$\log_2 y = -3$$

(2)

(b) Find the values of x such that

$$\frac{\log_2 32 + \log_2 16}{\log_2 x} = \log_2 x$$

(5)

Leave blank

8.

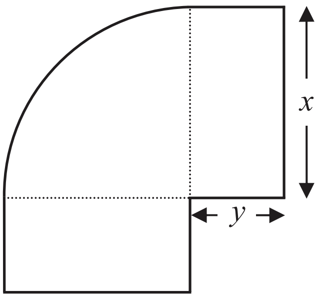

Figure 3

Figure 3 shows a flowerbed. Its shape is a quarter of a circle of radius x metres with two equal rectangles attached to it along its radii. Each rectangle has length equal to x metres and width equal to y metres.

Given that the area of the flowerbed is $4\ \text{m}^2$,

(a) show that

$$y = \frac{16 - \pi x^2}{8x}$$

(3)

(b) Hence show that the perimeter P metres of the flowerbed is given by the equation

$$P = \frac{8}{x} + 2x$$

(3)

(c) Use calculus to find the minimum value of P.

(5)

(d) Find the width of each rectangle when the perimeter is a minimum.
Give your answer to the nearest centimetre.

(2)

Leave blank

8.

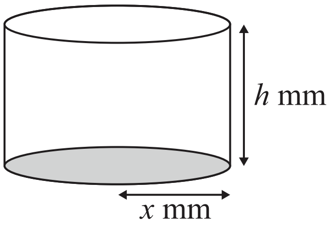

Figure 3

A manufacturer produces pain relieving tablets. Each tablet is in the shape of a solid circular cylinder with base radius x mm and height h mm, as shown in Figure 3.

Given that the volume of each tablet has to be 60 mm^3,

(a) express h in terms of x,

(1)

(b) show that the surface area, A mm^2, of a tablet is given by $A = 2\pi x^2 + \dfrac{120}{x}$

(3)

The manufacturer needs to minimise the surface area A mm^2, of a tablet.

(c) Use calculus to find the value of x for which A is a minimum.

(5)

(d) Calculate the minimum value of A, giving your answer to the nearest integer.

(2)

(e) Show that this value of A is a minimum.

(2)

10.

Figure 3

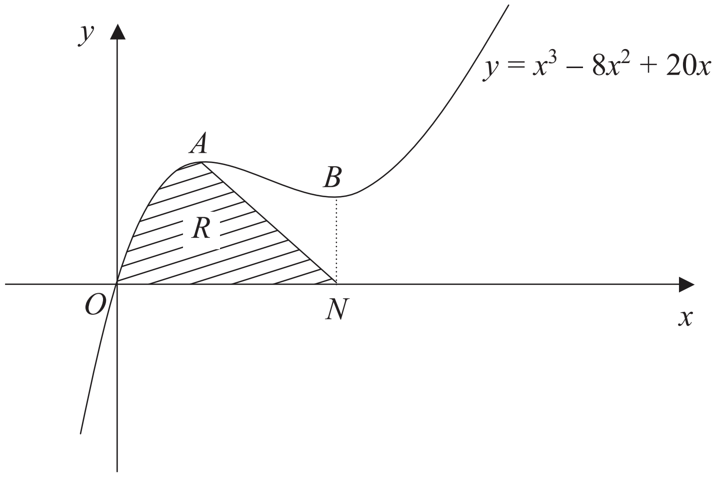

Figure 3 shows a sketch of part of the curve with equation $y = x^3 - 8x^2 + 20x$.
The curve has stationary points A and B.

(a) Use calculus to find the x-coordinates of A and B.

(4)

(b) Find the value of $\frac{\mathrm{d}^2y}{\mathrm{d}x^2}$ at A, and hence verify that A is a maximum.

(2)

The line through B parallel to the y-axis meets the x-axis at the point N.
The region R, shown shaded in Figure 3, is bounded by the curve, the x-axis and the line from A to N.

(c) Find $\int (x^3 - 8x^2 + 20x)\,\mathrm{d}x$.

(3)

(d) Hence calculate the exact area of R.

(5)